FUELLGRAF CHIMNEY & TOWER, INC.
ELECTRICAL SYSTEMS

800-621-4419

FG-3000/3000B FLASH-HEAD
COMPONENT LAYOUT

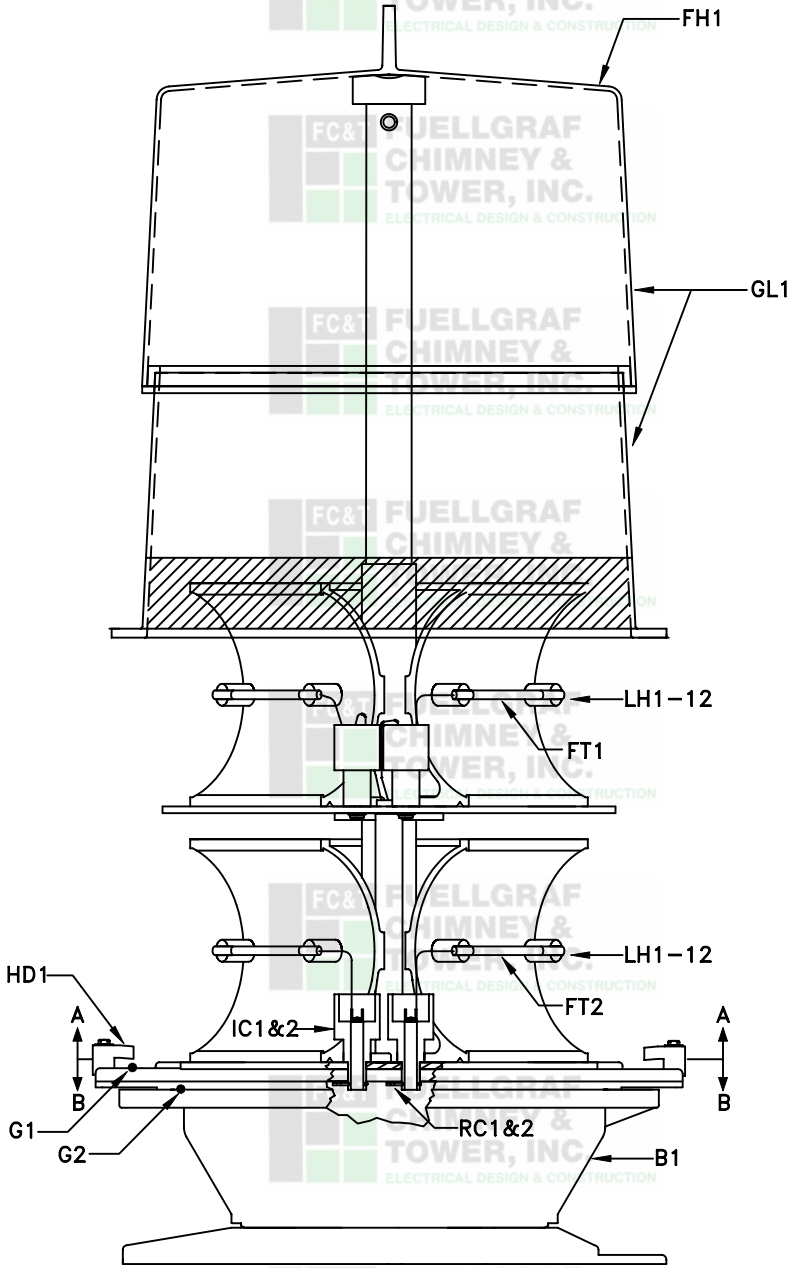

800-621-4419

FUELLGRAF CHIMNEY & TOWER, INC.
ELECTRICAL SYSTEMS

FG-3000/3000B FLASH-HEAD
LAYOUT & PARTS LIST

ITEM #	DESCRIPTION	PART#
FH1	Complete Flashhead Assembly	277-5004RW
FT1&2	Flashtube Assembly 12S00602	77-4209
B1	Base Assembly	77-4103
G1	Gasket, O-Ring For Lense	77-672072
G2	Gasket, Base Assembly	77-4103G
GL1	Globe Assembly	77-5095
HD1	Globe Hold Down Clip	3411072
IC1&2	Insulator Cup Assembly	77-4182
LH1-12	Flashtube Holder	77-4026
RC1&2	Retainer Clip	77-4191
S1	Switch, Flash-Head Interlock	77-2644
TB1	Terminal Block Complete	77-2556
T1&T2	Transformer, Trigger	77-4040

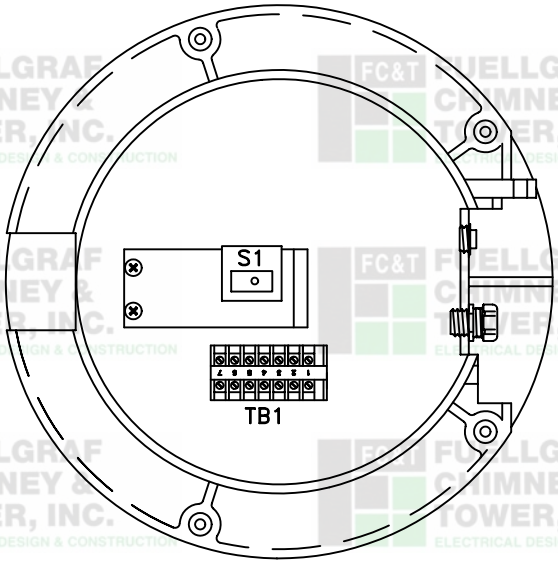

VIEW B-B

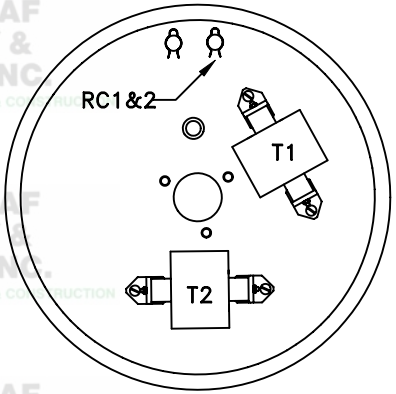

VIEW A-A

Fuellgraf Chimney & Tower, Inc.
270/598-8859 FAX 270/598-8797
parts@chimneytower.com